TECHNICAL DATASHEET · OUTDOOR · FIXED INSTALLATION

P5 outdoor LED screen, 3.84 × 1.92 m

Nominal size 4 × 2 m · 8 cabinets of 960 × 960 mm · 5,500 nits · IP65

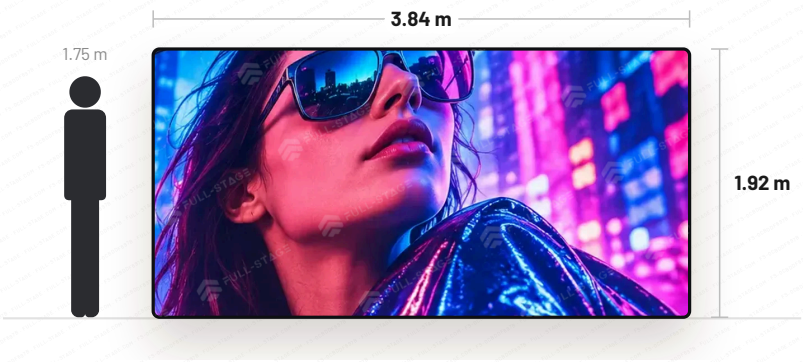

768 × 384 px
Total resolution

5,500 nits
Brightness · daylight visible

IP65
Rain and dust

4 × 2
Cabinets of 960 × 960 mm

COMPLETE SCREEN

Actual size	**3.84 × 1.92 m**
Area	**7.37 m²**
Configuration	**4 × 2 cabinets (8)**
Resolution	**768 × 384 px**
Total pixels	**294,912**
Pixel density	**40,000 px/m²**
Cabinet weight	**280 kg · 38 kg/m²**
Max. power	**6.4 kW · 868 W/m²**
Average power	**2.4 kW · 326 W/m²**
Power input	**AC 220 V ±10 %**
Processor	**NovaStar TB10**
Viewing distance	**5 to 100 m**

COMPLETE SCREEN · FRONT PLAN

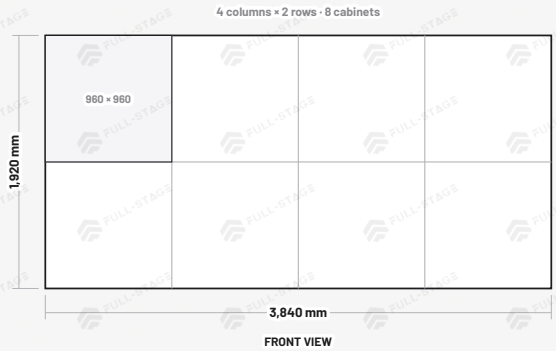

WHAT THE SYSTEM INCLUDES

8	P5 outdoor LED cabinets 960 × 960 mm
8	NovaStar receiving cards · 1 per cabinet
40	5 V / 60 A power supplies · 5 per cabinet
40	Inter-cabinet power cables · 1 m
✓	Structural engineering and drawings
1	NovaStar TB10 video processor
✓	NovaStar management software
2	Wooden pallet packing
8	Inter-cabinet RJ45 signal cables · 1 m
✓	Electrical engineering and drawings

SPARES 13 modules, 1 receiving card, 1 power supply

Full Stage & Trading Corp.
11764 W Sample Rd Ste 102, Coral Springs, FL 33065, USA

full-stage.com · info@full-stage.com
+1 (305) 809 0614 · FEIN 37-2087167

P5 OUTDOOR LED CABINET 960 × 960 MM · TECHNICAL DRAWING

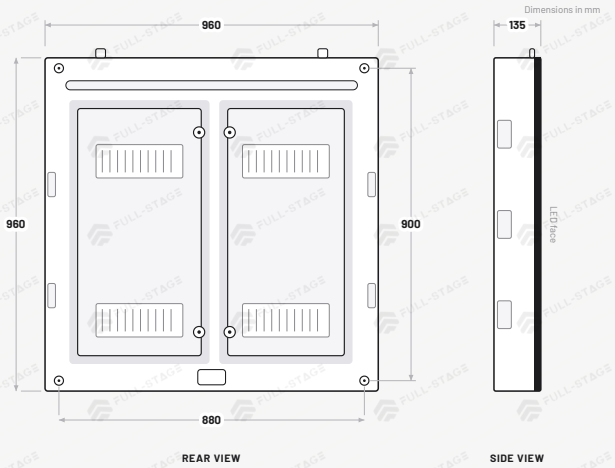

Dimensions	**960 × 960 × 135 mm**
Weight	**35 kg**
Material	**Die-cast aluminium**
Modules	**18 (3 × 6) of 320 × 160 mm**
Resolution	**192 × 192 px**
Power supplies	**5 × 5 V / 60 A**
Receiving card	**NovaStar · 1 per cabinet**
Max. / avg. power	**800 / 300 W**
Protection	**IP65**
Service access	**Rear · 2 sealed service doors**

P5 OUTDOOR LED MODULE 320 × 160 MM · TECHNICAL DRAWING

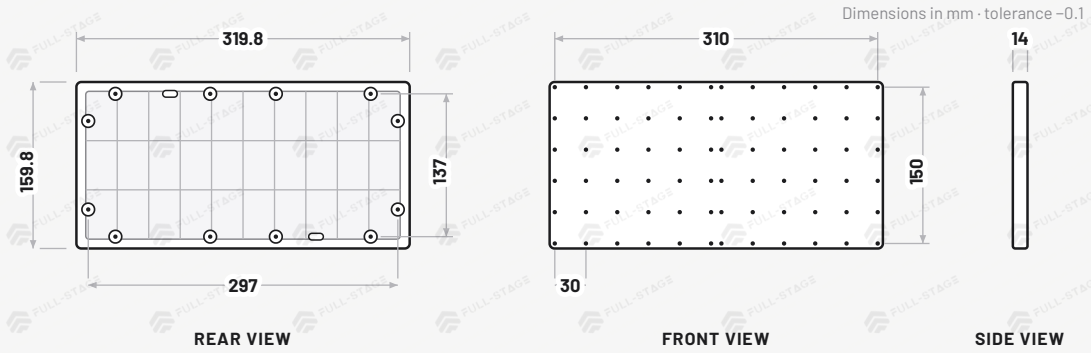

LED MODULE

Dimensions	**319.8 × 159.8 × 14 mm**
Resolution	**64 × 32 px**
LED type	**SMD1921**
Pixel configuration	**1R1G1B**
Scan mode	**1/5**
Connector	**HUB75-A**
Driver	**Constant current**
Weight	**0.9 kg**

IMAGE

Pixel pitch	**5 mm**
Pixel density	**40,000 px/m²**
Brightness	**5,500 nits**
Refresh rate	**6,400 Hz**
Grey scale	**256 levels per colour**
Colours	**16.7 million**
Viewing angle	**120° H × 100° V**

ENVIRONMENT AND RELIABILITY

Protection	**IP65**
Operating temperature	**−30 °C to +60 °C**
Storage temperature	**−35 °C to +65 °C**
Operating humidity	**10% to 95% RH**
Power input	**AC 220 V ±10 %**
MTBF	**> 20,000 h**
Lifespan	**100,000 operating hours**
Warranty	**2 years · Full-Stage**

Factory data. Dimensions in millimetres unless stated. Full-Stage may improve specifications without notice; the current datasheet is at full-stage.com.

Price and quote
Scan or click to see this screen on full-stage.com